Application Engineering

Sentronic+ Electronic Oil Pressure Control

BULLETIN NO: AE8-1314 R3

Contents

Safety

Important Safety Information 2
Responsibilities, Qualifications and Training 2
Terminal Venting and Other Pressurized System Hazards 2
Flammable Refrigerant Hazards 3
Electrical Hazards 3
Hot Surface and Fire Hazards 3
Lifting Hazards 3
POE Oil Hazards 3
Precautions 3
Signal Word Definitions 5

Introduction

Introduction and Features 6
Basic Control Operation 6
Sentronic+ Control Module 6
Installation 7
Remote Mounting 8
Grounding 8
Installing External Timer 8
Standard Control Circuit 8
Control with Alarm 8
The Current Sensing Relay Used with Compressor Inherent Motor Protectors 8
Using a Separate Control Voltage with the Sentronic+ (Figure 3) 9
LED Interpretation 9
Start Up Procedure 10
Troubleshooting 11
Interchangeability with Previous Sentronic Controls 11
Electrical Bench Checkout Procedure 11
Interchangeability of Sentronic+ and Sentronic Modules and Sensors 12
Connecting the Sentronic+ Module to an Older Sentronic Sensor 13
Sentronic+ Terminal Strip 14
Sentronic+ Terminal Strip 14

COPELAND

Safety

Important Safety Information

Those involved in the design, manufacture, and installation of a system, system purchasers, and service personnel may need to be aware of hazards and precautions discussed in this section and throughout this document. OEMs integrating the compressor into a system should ensure that their own employees follow this bulletin and provide any necessary safety information to those involved in manufacturing, installing, purchasing, and servicing the system.

Responsibilities, Qualifications and Training

• OEMs are responsible for system design, selection of appropriate components, integration of this component into the system, and testing the system. OEMs must ensure that staff involved in these activities are competent and qualified.

• OEMs are also responsible for ensuring that all product, service, and cautionary labels remain visible or are appropriately added in a conspicuous location on the system to ensure they are clear to any personnel involved in the installation, commissioning, troubleshooting or maintenance of this equipment.

• Only qualified and authorized HVAC or refrigeration personnel are permitted to install, commission, troubleshoot and maintain this equipment. Electrical connections must be made by qualified electrical personnel.

• Observe all applicable standards and codes for installing, servicing, and maintaining electrical and refrigeration equipment.

Terminal Venting and Other Pressurized System Hazards

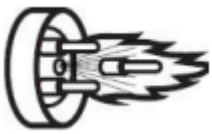

If a compressor's electrical terminal pin loses its seal, pressurized oil, refrigerant, and debris may spray out. This is called "terminal venting".

The ejected debris, oil, and refrigerant can injure people or damage property. The oil and refrigerant spray can be ignited by electrical arcing at the terminal or any nearby ignition source, producing flames that may project a significant distance from the compressor. The distance depends on the pressure and the amount of refrigerant and oil mixture in the system. The flames can cause serious or fatal burns and ignite nearby materials.

Each compressor has a terminal cover or molded plug that covers electrical connections. The cover or plug helps to protect against electric shock and the risks of terminal venting. If terminal venting occurs, the cover or plug helps contain the spray of refrigerant and oil and reduces the risk of ignition. If ignition occurs, the plug or cover helps contain the flames. However, neither the terminal cover nor the molded plug can completely eliminate the risk of venting, ignition, or electric shock.

See copeland.com/terminal-venting for more details about terminal venting. Additionally, a compressor's refrigerant lines keep refrigerant and oil under pressure. When removing or recharging refrigerant from this component during service, this can pose a pressurized fluid hazard.

© 2025 Copeland LP

Flammable Refrigerant Hazards



If flammable refrigerant is released from a system, an explosive concentration can be present in the air near the system. If there is an ignition source nearby, a release of flammable refrigerant can result in a fire or explosion. While systems using flammable refrigerant are designed to mitigate the risk of ignition if the refrigerant is released, fire and explosion can still occur.

See copeland.com/flammable-refrigerants for more information on flammable refrigerant safety.

Electrical Hazards



Until a system is de-energized, and capacitors have been discharged, the system presents a risk of electric shock.

Hot Surface and Fire Hazards



While the system is energized, and for some time after it is deenergized, the compressor may be hot. Touching the compressor before it has cooled can result in severe burns. When brazing system components during service, the flames can cause severe burns and ignite nearby combustible materials.

Lifting Hazards



Certain system components may be very heavy. Improperly lifting system components or the compressor can result in serious personal injury. Use proper lifting techniques when moving.

POE Oil Hazards

This equipment contains polyol ester (POE) oils. Certain polymers (e.g., PVC/CPVC and polycarbonate) can be harmed if they come into contact with POE oils. If POE oil contacts bare skin, it may cause an allergic skin reaction.

Precautions

• Always wear personal protective equipment (gloves, eye protection, etc.).

• Keep a fire extinguisher at the jobsite at all times.

• Keep clear of the compressor when power is applied.

- IMMEDIATELY GET AWAY **if you hear unusual sounds in the compressor. They can indicate that terminal pin ejection may be imminent. This may sound like electrical arcing (sizzling, sputtering or popping). However, terminal venting may still occur even if you do not hear any unusual sounds.**

© 2025 Copeland LP

• Never reset a breaker or replace a blown fuse without performing appropriate electrical testing

- **A tripped breaker or blown fuse may indicate an electrical fault in the compressor. Energizing a compressor with an electrical fault can cause terminal venting. Perform checks to rule out an electrical fault.**

• Disconnect power and use lock-out/tag-out procedures before servicing.

- Before removing the terminal cover or molded plug, check that ALL electrical power is disconnected from the unit. Make sure that all power legs are open. (Note: The system may have more than one power supply.)

- Discharge capacitors for a minimum of two minutes

- Always use control of hazardous energy (lock-out/tag-out) procedures to ensure that power is not reconnected while the unit is being serviced.

• Allow time for the compressor to cool before servicing.

- Ensure that materials and wiring do not touch high temperature areas of the compressor.

• Keep all non-essential personnel away from the compressor during service.

• For A3 refrigerants (R290) remove refrigerant from both the high and low sides of the compressor. Use a recovery machine and cylinder designed for flammable refrigerants. Do not use standard recovery machines because they contain sources of ignition such as switches, high- and low-pressure controls and relays. Only vent the R290 refrigerant into the atmosphere if the system is in a well-ventilated area.

• Never use a torch to remove the compressor. Only tubing cutters should be used for both A2L and A3 refrigerants.

• Use an appropriate lifting device to install or remove the compressor.

• Never install a system and leave it unattended when it has no charge, a holding charge, or with the service valves closed without electrically locking out the system.

• Always wear appropriate safety glasses and gloves when brazing or unbrazing system components.

• Charge the system with only approved refrigerants and refrigeration oils.

• Keep POE oils away from certain polymers (e.g., PVC/CPVC and polycarbonate) and any other surface or material that might be harmed by POE oils. Proper protective equipment (gloves, eye protection, etc.) must be used when handling POE lubricant. Handle POE oil with care. Refer to the Safety Data Sheet (SDS) for further details.

• Before energizing the system:

1. Securely fasten the protective terminal cover or molded plug to the compressor, and

2. Check that the compressor is properly grounded per the applicable system and compressor requirements.

© 2025 Copeland LP

Signal Word Definitions

The signal word explained below are used throughout the document to indicate safety messages.



DANGER indicates a hazardous situation which, if not avoided, will result in death or serious injury.



WARNING indicates a hazardous situation which, if not avoided, could result in death or serious injury.



CAUTION, used with the safety alert symbol, indicates a hazardous situation which, if not avoided, could result in minor or moderate injury.

© 2025 Copeland LP

Introduction

Introduction and Features

The Sentronic+ electronic oil pressure safety control uses a pressure sensor and an electronic module to precisely measure oil pump differential pressure. Common sources of leaks (bellows, capillary tubes, and pressure connections) are eliminated when using the Sentronic+.

Another advantage of Sentronic+ is a precise electronic clock for the two-minute time-out circuit. Traditional mechanical controls use resistance heaters to measure the time-out in the event of low oil pressure. On 208V systems, low ambient temperatures or brown- out type conditions cause the heater output to be reduced, thus increasing the time-out period from two minutes to three minutes or more when low oil pressure conditions exist. The electronic clock will always provide a two-minute time-out.

The Copeland Sentronic+ module features a light emitting diode (LED) to provide a visual indication of the oil pressure condition. To aid in troubleshooting, the cover label has a summary of the LED fault indications.

Sentronic+ no longer requires the use of shielded cables because of an electronic noise suppression feature.

All Copelametic compressors that have an external oil pump (see **AE4-1166**) require an Copeland-approved oil pressure safety control. Failure to use an approved oil pressure safety control will be considered misuse of the compressor and may void the warranty if the compressor should fail due to lack of lubrication.

An oil pressure safety control must meet many requirements for Copeland approval. These requirements include maintaining the pressure setting and time delay calibration within close limits over the widest variation in expected operating conditions. Safety controls must pass a life test with a minimum of 200,000 cycles. Controls must be non-adjustable and must have a manual reset with a 120 second nominal time delay at rated voltage, have a cut-out pressure setting of 7 to 9 PSID (Pounds per Square Inch Differential), and a cut-in pressure of 12-14 PSID. In this case, PSID is the difference between the crankcase pressure and oil pump outlet pressure.

The module control base can accept either threaded or push-in electrical conduit connections.

Basic Control Operation

The oil pressure sensor is mounted directly into the oil pump of the compressor. The Sentronic+ sensor measures the oil pump differential pressure and has an internal contact that opens due to low oil pressure, causing the Sentronic+ electronic control module to begin the timing clock.

Should the oil pressure fall below 7 to 9 PSID for a period of two minutes, the Sentronic+ module will open the normally closed control circuit, which shuts the compressor off.

The Sentronic+ will also shut the compressor down if the oil pressure fluctuates between acceptable and low oil pressure (indicated by an alternating red and green LED) and records a history of low oil pressure for 60% or more of a running cycle. In addition, Sentronic+ has a memory that will retain the oil pressure levels for up to one minute during a power loss.

A trip of the oil pressure safety switch is a warning that the system has been without proper lubrication for too long. Repeated trips of the oil pressure safety control are a clear indication that something in the system requires immediate remedial action. On a well-designed system, there should be no trips of the oil pressure safety control, and repeated trips should never be accepted as a normal part of system operation.

Sentronic+ Control Module

In addition to the normally closed (N.C.) contact used for compressor shutdown, the Sentronic+ has a normally open (N.O.) contact which can be used in an alarm circuit (See **Figure 5**).

The Single Pole Double Throw (S.P.D.T.) contact of Sentronic+ can be electrically isolated from the control

© 2025 Copeland LP

circuit power supply and used to control a different voltage (See **Figure 3**).

Installation

All Copeland compressors with external oil pumps shipped after September 1986 have a plug fitting in the oil pump for mounting the sensor. The external oil pump is designed to accept either the Sentronic+ sensor or a capillary tube for the traditional mechanical oil pressure control.

Removing the cover on the module is accomplished by gently lifting two locking tabs on the lower corners of the cover and pulling the lower edge of the cover away from the base. Refer to **Figure 1**.

Installation of the cover is accomplished by hooking the top of the cover down on the three tabs on the top of the module base and swinging the cover back into position until the cover release tabs latch into place. Refer to **Figure 2.**

Installing the Sensor

1. Remove the plug fitting from the oil pump housing (new installations). Discard the copper washer from under the head of the plug fitting.

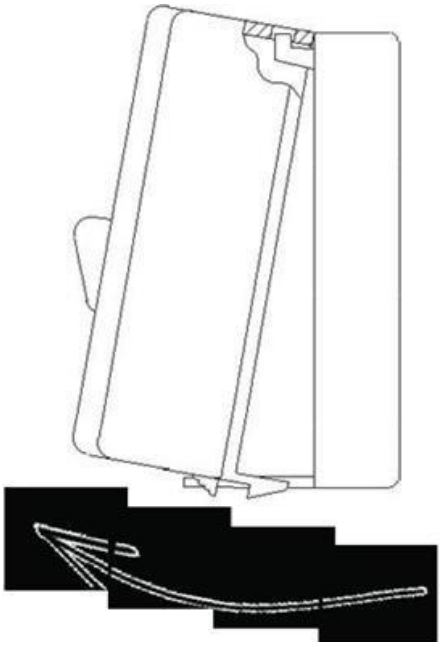

Figure 1

2. Install the new O ring into the groove around the sensor. Note: If applicable, replace the aged O-ring with the new one supplied in the kit. Use refrigeration oil to pre-lubricate the O ring before installation. Use care not to cut the O ring.

3. Use the new copper washer. Do not reuse the copper washer removed with the plug fitting.

4. Screw the sensor into the pump body. Torque the sensor to 60-65 Ft.-Lb.

Installing the Module

1. When using the bracket above the oil pump, use the supplied 10-32 pan head slotted screws with washers. Alternatively, four holes have been incorporated in the module base to provide the option of remote mounting. Refer to Figure 7. The maximum screw length is .265” plus bracket thickness. Longer screws could damage the circuit board.

2. Plug the cable from the module into the end of the sensor. **Care should be taken to route the cable away from current carrying conductors**.

   Excessive hi-potting can cause damage to the Sentronic+ module. If hi-potting is required, we recommend it be limited to a single time.

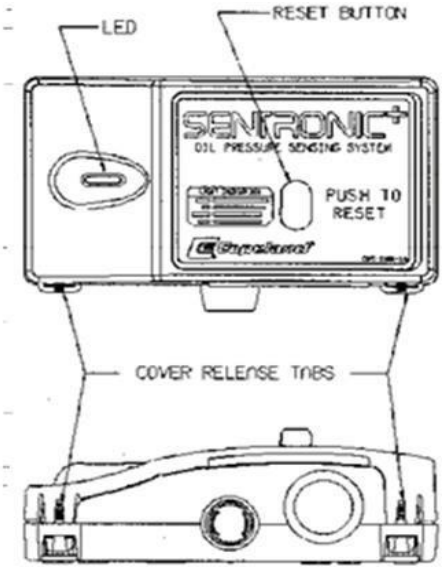

Figure 2

Static electricity discharges from electrostatic painting can damage the Sentronic+ module. We recommend that the module not be mounted until such painting is completed.

The module location and conduit lengths should be chosen to avoid bending of the conduit beyond its normal range of flexibility.

Remote Mounting

The Sentronic+ module sends a low voltage signal to determine whether the sensor circuit is opened or closed. When the Sentronic+ module is mounted on the compressor, the sensor will normally experience no disturbances from nearby electrical sources. While the Sentronic+ is not particularly susceptible to Electromagnetic Field (EMF) interference, it is wise to keep the cable away from other current carrying conductors.

Grounding

The Sentronic+ plus has been designed with a plastic case and does not require a ground connection. A ground screw is provided on the terminal strip for those installations utilizing a ground wire in the conduit.

Sentronic+	Specifications
Cut-Out	7-9 PSID
Cut-In	12-14PSID
Time Delay 15seconds	120 seconds ±
Sensor Torque	60-65 Ft.-Lb.
Max Control	375 VA; 120V
Max Control	500 VA; 240V
Max Inrush	1600 VA; 120 V
Max Inrush	3000 VA; 240 V

Installing External Timer

Caution: An electronic timer may be placed in series with the compressor contactor to force a delay before each start and prevent possible short cycling. The timer must be located so it also prevents the Sentronic+ from energizing during the timing period. **SOME INEXPENSIVE TIMERS MAY "LEAK" ENOUGH POWER WHILE "TIMING-OUT," TO ENERGIZE THE SENTRONIC+ EVEN THOUGH THERE MAY NOT BE ENOUGH "LEAKAGE" TO CLOSE THE COMPRESSOR CONTACTOR. THIS CAN CAUSE A PREMATURE SENTRONIC+ TRIP.**

If there is doubt, the circuit should be checked before placing it in operation.

Standard Control Circuit

Both **Figures 4A** (Sentronic+) and **4B** (previous Sentronic) show typical wiring connections and the similarity of Sentronic+ and Sentronic oil pressure switches used on three-phase motor compressors.

When the operating and limit controls are closed, the system is calling for the compressor to run. The electrical circuit for the Sentronic+ module consists of a 240 V (120V) connection to the appropriate terminal and the jumper between 2 and "M" and the normally closed (N.C.) contact between "M" and "L". The compressor contactor circuit is completed by the normally closed contact between "M" and "L". If the module trips the circuit due to low oil pressure, the N.C. contact between "M" and "L" opens thereby opening the circuit of the compressor contactor and the module.

Once the Sentronic+ module has tripped, it must be manually reset to restore operation.

Control with Alarm

The alarm circuit as seen in **Figure 5** will be activated when the Sentronic+ trips on low oil pressure. The normally open (N.O.) contactor between "L" and "A" will be closed when the module trips thereby activating the alarm circuitry.

The Current Sensing Relay Used with Compressor Inherent Motor Protectors

A compressor may exhibit nuisance trips if it has an inherent protector and experiences motor overheating.

© 2025 Copeland LP

The use of a current-sensing relay allows the compressor to cycle on the internal inherent protector without affecting the operation of the Sentronic+.

After an overload trip of a compressor with an inherent protector, the control circuit will still be closed and the Sentronic energized although the compressor motor is not operating. The two-minute timing circuit will activate due to a lack of oil pressure, and after the 120-second time delay; the oil pressure safety switch will trip. Even though the compressor motor cools sufficiently for the internal inherent protector to automatically reset, the compressor cannot start until the oil pressure safety control is manually reset.

This is normally not a problem since the compressor, if properly applied, will seldom if ever trip on the internal inherent protector. If it should happen to do so, the fact that a protector trip has occurred indicates that the system operation should be reviewed. However, on frozen food or other critical applications where a product loss may occur, if a compressor shutdown should occur during the night or a weekend when the equipment is unattended, it may be desirable to prevent a possible nuisance trip by means of a current sensing relay.

The current sensing Relay is mounted on the load side of the contactor, senses by induction the full operating current of one phase of the motor, closes on a rise above 14 amps, and opens if the load current falls below 4 amps.

Figure 6 uses a current relay (C.S.). When the current relay is not energized by motor current, its Normally Open (N.O.) contact opens the circuit that powers the Sentronic to avoid a nuisance trip.

NOTE: On some 550-volt motor-compressors, it may be necessary to loop the current carrying wire so that it passes through the current sensing relay twice in order to increase the metered amperage to close the relay contacts.

Using a Separate Control Voltage with the Sentronic+ (Figure 3)

To supply the Sentronic+ with two separate voltages (compressor contactor coil and module), remove the jumper between terminals “2” and “M.” In this diagram, the separate control voltage is supplied by “LL1” and “LL2.” The separate voltage powers the compressor contactor (CC) by means of a remote relay. When the remote relay is energized, requesting the compressor to run, its contact (RR), closes to deliver “LL1” voltage to the operating and limit contacts. If the contacts in the operating and limit circuit are closed, “LL1” voltage energizes the compressor contactor coil (CC). When the compressor contactor closes, it provides the power, through a control circuit transformer (XFMR), to energize the Sentronic+. If the Sentronic+ trips, its contact (“L” to “M”) in the “LL1-LL2” control circuit opens to de-energize the compressor contactor and stop the compressor. The Sentronic+ contact (“L” to “A”) closes to energize an Alarm Relay (AR).

Note that any A.C. voltage up to and including 240 volts may be used. For line voltages greater than 240 V, a step-down transformer (circuit transformer XFMR in **Figure 3**) must be used.

LED Interpretation

To aid in troubleshooting an oil pressure problem, the Sentronic+ has an LED as a visual aid. This section explains the information provided by the LED.

LED Green
Compressor has sufficient oil pressure.

LED Red
Compressor is experiencing insufficient oil pressure.

Red/Green LED Alternating
Compressor is experiencing erratic oil pressure indicating a possible system problem.

No Light
Control Circuit is not energized L or M for light circuit.

© 2025 Copeland LP

Start Up Procedure

This page describes an electrical check for the Copeland Sentronic oil pressure module and sensor installed in an air-conditioning or refrigeration system.

This test must only be performed by qualified service personnel (see next page for further information and a bench test procedure for the Sentronic module).

Important! Before energizing this system, make sure the Sentronic is wired correctly. Refer to the wiring diagrams in the Sentronic brochure. Failure to do so may result in a damaged control unit.

This test is to be performed with the Sentronic oil pressure module and sensor connected to the system, and the system energized at the start of the test.

If at any time during this test sequence the Sentronic module appears to be malfunctioning, it should be bench tested.

Sentronic Specifications:
Cut-in pressure 12-14 PSID
Cut-in pressure (Sensor contact closes)
Cut-out pressure 7 - 9 PSID
(Sensor contact opens)

Time Delay = 120 sec. ± 15 sec.

Maximum Allowable Controlled Load for the normally open and normally closed contacts =
120V, 6 Amps or
240V, 2.5 Amps.

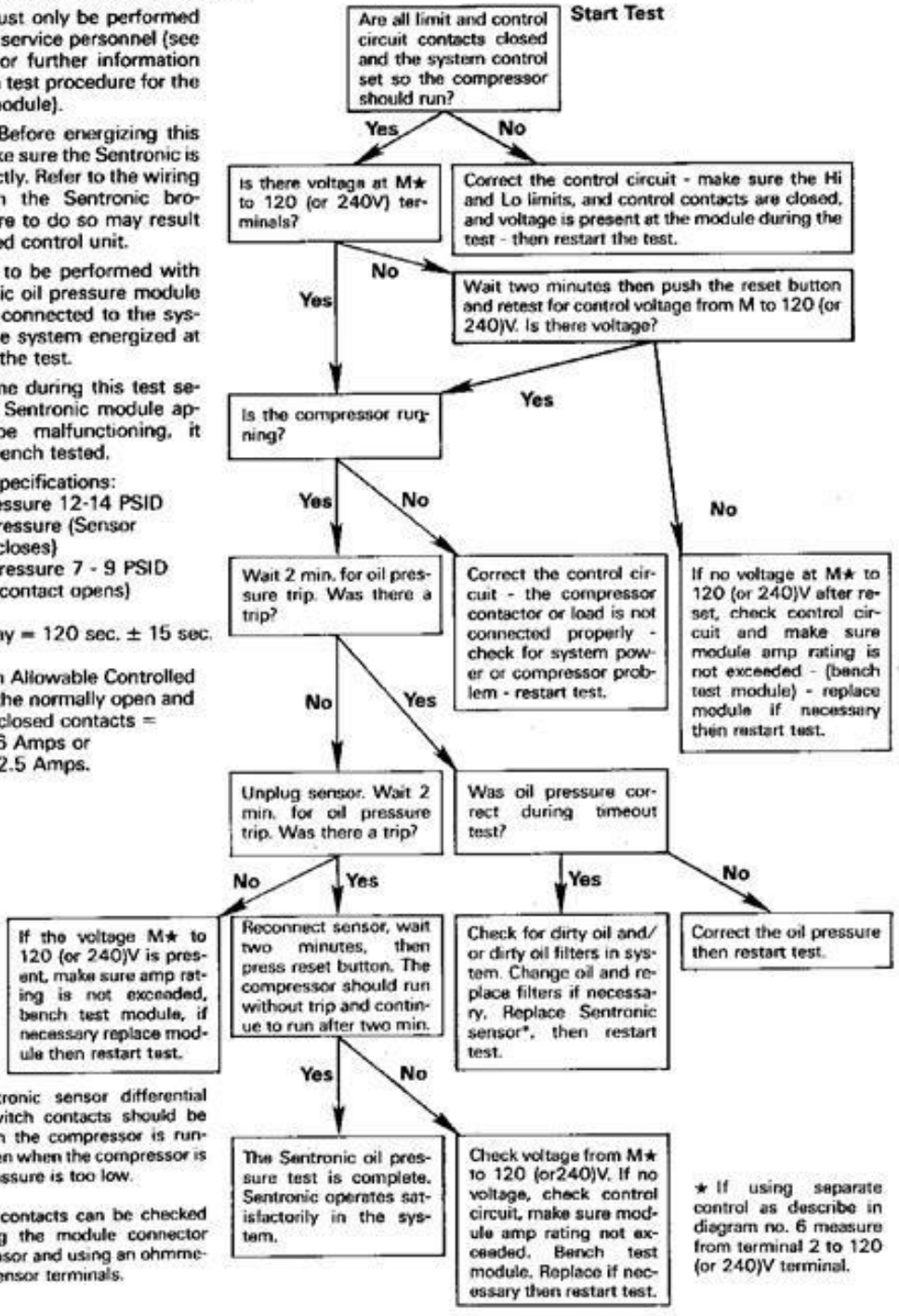

* The Sentronic sensor differential pressure switch contacts should be closed when the compressor is running and open when the compressor is off or oil pressure is too low.

The switch contacts can be checked by removing the module connector from the sensor and using an ohmmeter on the sensor terminals.

★ If using separate control as describe in diagram no. 6 measure from terminal 2 to 120 (or 240)V terminal.

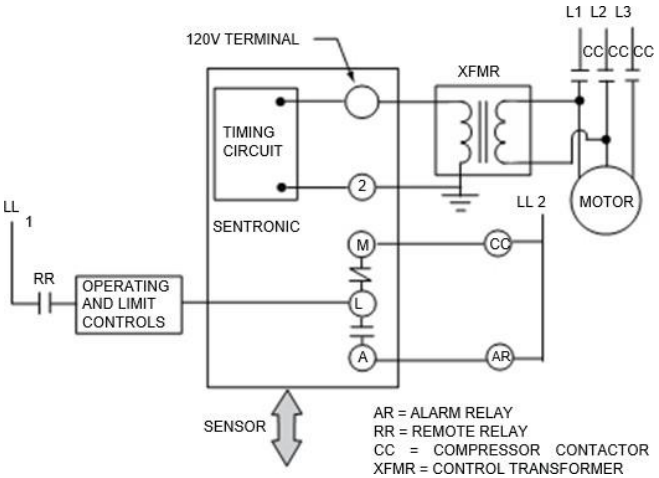

Figure 1

Troubleshooting

Approximate oil pressure can be measured in the field. Oil pumps are furnished with a Schrader valve mounted on the oil pump discharge port. To measure oil pressure, subtract crankcase pressure from discharge oil pressure.

Checking the Installed Sentronic+ Module

Shut off the compressor. Unplug the sensor. Read the control voltage between the 240V (or 115V) terminal and the L (or 2 if separate control is used) terminal to verify power to the module.

Start the compressor with the sensor unplugged. Recheck to make sure the module voltage is still present. After 120 seconds ± 15 seconds, the L-M contact should open and shut off the compressor.

With the module off due to low oil pressure, wait two minutes and press the reset button. Lack of power after a reset may be due to an external time delay circuit.

Checking the Sensor

Unplug the sensor and start the compressor. The Sentronic+ module LED should be red. Simultaneously measure the oil pump differential pressure. Monitor the two terminals at the back of the sensor with an ohmmeter or continuity measuring set. If the differential pressure is below the range of 7 to 9 PSID, the sensor circuit should be open (no continuity, infinite resistance). If the pressure is above 12 to 14 PSID, the sensor circuit should be closed.

Measure the differential pressure by subtracting the crankcase pressure from the oil pump outlet pressure.

Interchangeability with Previous Sentronic Controls

The electronic two-minute timing circuit operates whenever voltage is applied to a Sentronic+, and it has not tripped. The timing will be interrupted when oil pressure rises above 12-14 PSID and closes the Sentronic sensor. Should oil pressure not build up sufficiently within 120-seconds, the electronic delay will time out, open its L-M contact, break the control circuit, and de-energize the compressor contactor to stop compressor operation.

While the compressor is running, if the compressor net oil pressure falls below the cut-out setting of the sensor while operating and does not re-establish sufficient pressure within an acceptable time, the time delay circuit will open the L-M contacts, stopping compressor operation. Once the oil pressure switch has tripped, it must be manually reset to restore the system to operation.

IMPORTANT: If a power interruption occurs after an oil pressure safety trip, wait two minutes before resetting after power is restored.

Electrical Bench Checkout Procedure

This instruction sheet describes how the Sentronic+ may be easily bench-checked using only a voltmeter and a 120VAC electrical extension cord.

CAUTION!

Damage to the Sentronic+ module may result if the "M" terminal of the Sentronic+ is connected to ground or directly to a voltage line!

This test is conducted with 120VAC. A shock will result if the Sentronic+ terminals are touched when the Sentronic module is energized.

© 2025 Copeland LP

Use care whenever working with any voltage! Make sure your electrical outlet is grounded, the electrical extension cord used has a ground wire, and the ground wire is connected to the grounding screw of the Sentronic+ .

1. Apply 120VAC power to the Sentronic+ module terminals marked “120” and “L”. The Sentronic should have a jumper in place between terminals “M” and “2”.

2. Wait two minutes, then push the Sentronic+ reset button to reset the module and start the timing circuit.

3. With a voltmeter, measure line voltage (120VAC) between the “M” terminal and the “120” terminal. It should be the same as the electrical outlet voltage - about 120VAC.

4. Since there is no connection made to the pressure sensor, the module sees this as a no-oil pressure condition. After two minutes (plus or minus 15 seconds - dependent on 50 or 60 cycle frequency) the Sentronic internal timer will “time- out”. The module will trip; the circuit between “L” and “M” will open, and it will no longer pass current to the load.

5. With the voltmeter connected to terminals “M” and “120”, the voltage should now read zero volts because the circuit between “L” and “M” has been opened through the action of the electronic circuit.

6. Reset the Sentronic+, then remove voltage from terminals “120” and “L”. With a small piece of wire, jumper the female sensor connections at the end of the black sensor cord attached to the module. Reapply power to terminals “120” and “L” and wait two minutes. The module should not “time-out” after two minutes because jumpering the sensor connections makes the timing circuit “see” good oil pressure. The jumper imitates the action of a small pressure switch located in the sensor. This switch opens on low oil pressure and closes on good oil pressure.

7. Measure between the “120” terminal and the “M” terminal with the voltmeter. The meter should read full line voltage showing that the circuit has not opened.

8. To check if the module will operate on 208/240 volts as well as on 120 volts, change the scale of the voltmeter (if necessary), to read up to 250VAC. Without removing power, measure the voltage between the “M” terminal and the “240” terminal. You should read nearly twice the voltage as that read between the “M” terminal and the 120“ terminal. This is because Sentronic+ has a small control transformer connected so that it can accept either 120V or 208/240V. It’s self-transforming action actually enables it to step up its own voltage. By making this voltage check, the transformer is being checked.

9. If the module successfully passes the above test sequence it is fully functional. If the module fails any of the above steps, it is faulty and should be replaced.

Interchangeability of Sentronic+ and Sentronic Modules and Sensors

The Sentronic+™ oil pressure control uses both a new module and a new sensor. The sensors and module can be made compatible with older generation components if the following steps are taken:

To use a Sentronic+ module with an older Sentronic™ sensor, the older Sentronic sensor cable must be wired to the new Sentronic+ module.

To use an older Sentronic module with a Sentronic+ sensor, the Sentronic+ cable must be wired to the Sentronic module.

There is an older generation Sentronic module which is fully compatible with the Sentronic+ sensor. It is supplied with the new (Sentronic+) cable, which is gray for identification purposes, see illustration below.



New Sentronic+ Old Sentronic

© 2025 Copeland LP

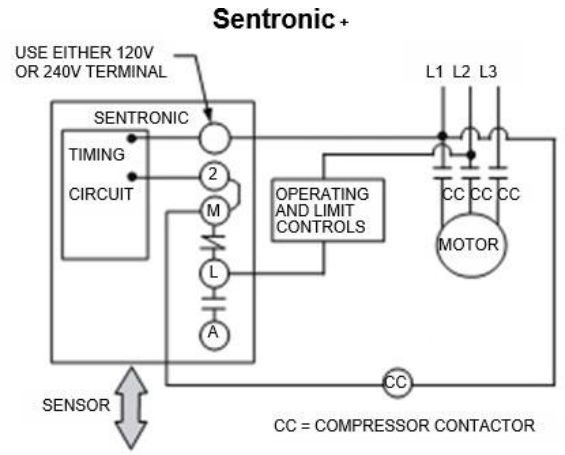

Figure 4A

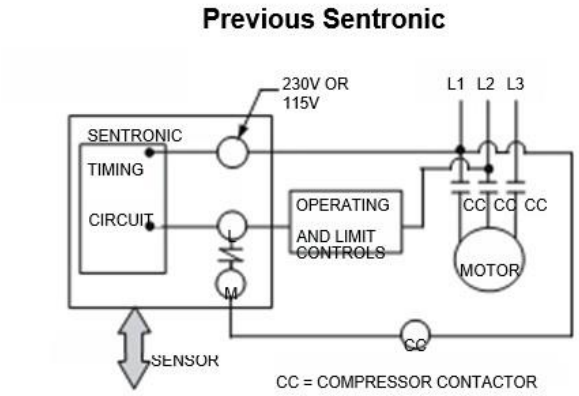

Figure 4B

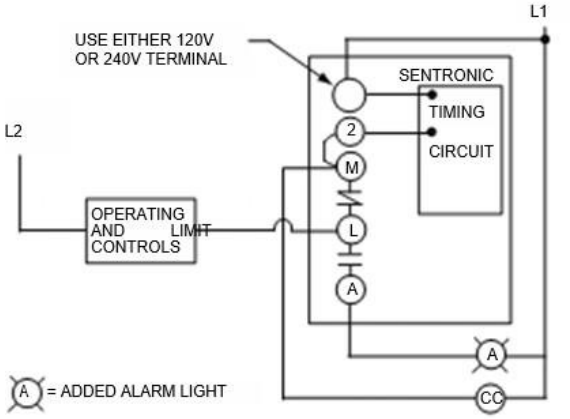

Figure 5

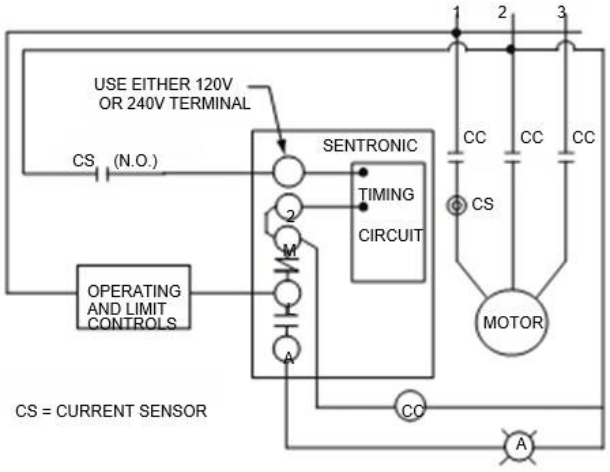

Figure 6

Connecting the Sentronic+ Module to an Older Sentronic Sensor

Removing the cable from the old Sentronic module: •

- Disconnect power to the old module
- Disconnect the cable from the sensor
- Remove the cover from the old module
- Remove the two cable quick connections from the circuit board
- Using pliers, squeeze the strain relief slots and pull to remove the cable from the module
- Remove the old module from the compressor

Removing the cable from the new Sentronic+ module:

- Remove the cover from the Sentronic+ module
- Pull the 2 cable quick connects from the circuit board (these are labeled “Org” and “Red”)
- Remove the wires from the strain relief (note the routing of the wires for future reference) and lift the wires out
- Remove the wire cable from the module by twisting the conduit counterclockwise and gently pulling

Connecting the old cable to the Sentronic+ module:

- Trim approximately 2” of cable sheathing from the module end of the old cable, taking care not to nick the wire insulation
- Feed the wires into the module through the hole in the bottom of the case
- Leaving enough lead length to reach the quick connects, push the wires into the strain relief.
- Connect the 2 quick-connects to the “ORG” and “RED” spades. (Note: the connections may be interchanged; there is no polarity on these wires). Refer to **Figure 7**.
- Install the module to the compressor and make wiring and sensor connections per the general instructions

Sentronic+ Terminal Strip

Removing the cable from the new Sentronic+ module:

- Disconnect power to the module
- Disconnect the cable from the sensor
- Remove the cover from the Sentronic+ module
- Pull the 2 cable quick connects from the circuit board (these are labeled “Org” and “Red”)
- Remove the wires from the strain relief by lifting the wires out
- Remove the wire cable from the module by twisting the conduit counterclockwise and gently pulling

Removing the cable from the old Sentronic module:

- Remove the cover from the old module
- Remove the two cable quick connections from the circuit board
- Using pliers, squeeze the strain relief slots and pull to remove the cable from the module
- Retain the strain relief from the cable for use on the Sentronic+ cable

Connecting the new cable to the old Sentronic module:

- Position the strain relief on the new cable at the termination of the conduit
- Feed the wires into the module through the hole in the bottom of the case
- Push the strain relief into position to lock it
- Connect the two quick connects to the circuit board. There is no polarity on the leads.
- Install the module on the compressor and make wiring and sensor connections per the general instructions

Sentronic+ Terminal Strip

- The Sentronic+ module terminal strip is designed to accept a bare wire end instead of a spade terminal
- If a Sentronic+ module is being retrofitted to a system with spade connections, the spade maybe clipped off and ¼” of the wire end stripped. Or one leg of the spade may be clipped off for insertion into the terminal strip

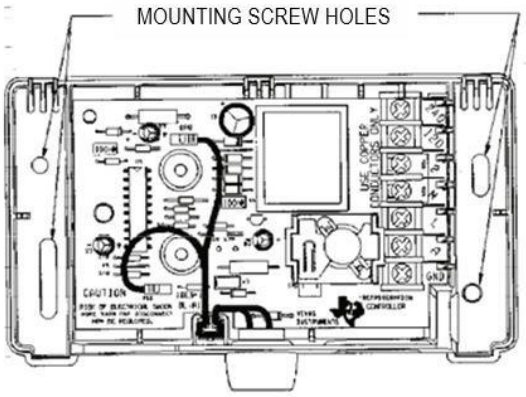

Figure 7

Revision Tracking R3

The document format has been updated to the new Copeland format

All occurrences of "Emerson" have been removed

A note regarding A3 and R290 venting has been updated

The contents of this publication are presented for informational purposes only and are not to be construed as warranties or guarantees, express or implied, regarding the products or services described herein or their use or applicability. Copeland LP and/or its affiliates (collectively "Copeland"), as applicable, reserve the right to modify the design or specifications of such products at any time without notice. Copeland does not assume responsibility for the selection, use or maintenance of any product. Responsibility for proper selection, use and maintenance of any Copeland product remains solely with the purchaser or end user.