XEV22D

DRIVER FOR STEPPER ELECTRONIC EXPANSION VALVES

--- MANUAL FOR RELEASE 1.5 ---

1. GENERAL WARNING

1.1 PLEASE READ BEFORE USING THIS MANUAL

- This manual is part of the product and should be kept near the instrument for easy and quick reference.
- The instrument shall not be used for purposes different from those described hereunder. It cannot be used as a safety device.
- Check the application limits before proceeding.
- Copeland Controls S.r.l. reserves the right to change the composition of its products, even without notice, ensuring the same and unchanged functionality.

1.2 SAFETY PRECAUTIONS

- Check the supply voltage is correct before connecting the instrument.
- Do not expose to water or moisture: use the controller only within the operating limits avoiding sudden temperature changes with high atmospheric humidity to prevent formation of condensation
- **Warning:** disconnect all electrical connections before any kind of maintenance.
- Fit the probe where it is not accessible by the End User. The instrument must not be opened.
- In case of failure or faulty operation send the instrument back to the distributor or to "Copeland Controls S.r.l." (see address) with a detailed description of the fault.
- Consider the maximum current which can be applied to each relay (see Technical Data).
- Ensure that the wires for probes, loads and the power supply are separated and far enough from each other, without crossing or intertwining.
- In case of applications in industrial environments, the use of mains filters (our mod. FT1) in parallel with inductive loads could be useful.

2. GENERAL DESCRIPTION

The **XEV22D** module is able to drive a large variety of **stepper electronic expansion valves**. XEV22D permits to regulate the superheat (SH) of the fluid that runs into refrigerating unit in order to obtain optimized performance and a functioning of the evaporator independent by climatic or load conditions. **XEV22D** modules are equipped with two probe inputs, one for 4 to 20mA or 0 to 5V pressure transducer and another one for NTC-EU, NTC-US or Pt1000 temperature probe.
A LAN connection permits to transmit the pressure signal to others XEV modules in order to use only one pressure transducer in multiplexed cabinet applications.
There are also two configurable digital inputs, the first one is free of voltage and the other ones is at high voltage in order to simplify connections with cooling request signal.
With the useful display it's possible to see the value of superheat (SH), the degree of opening of the valve or the probe values, the local keyboard allows programming the instrument without any other devices.
To complete instrument equipment, a RS485 serial link permits to connect XEV22D to **Copeland** monitoring and supervising systems.

3. PROBES RELATED TO THE XEV22D

3.1 PP07, PP11, PP30: 4÷20MA PRESSURE TRANSDUCERS

NAME	CABLE LENGTH	RANGE	COPELAND CODE
PP07	2,0MT	-0,5+7bar rel FE	BE009302 00
PP11	2,0MT	-0,5+11bar rel FE	BE009302 07
PP30	2,0MT	0+307bar rel FE	BE009302 04

3.2 NP4-67 OR PMP4-67 PIPE MOUNTING TEMPERATURE PROBE

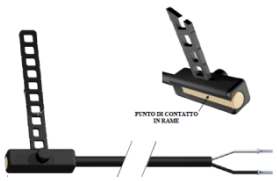

The NP4-67 (NTC sensor) **or PMP4-67 (PT1000** sensor) temperature probe can be used on the suction line to monitor the evaporator/Heat exchanger outlet temperature.

NP4-67 - Code BN609001 52 - 1.5MT NTC probe
Measurement range: -40+110°C, Cable 1,5mt
PMP4-67 - Code BZ609001 53 - 1.5MT Pt1000 probe
Measurement range: -70+110°C, Cable 1,5mt

4. CONNECTIONS

The instrument is provided with pluggable screw terminal block to connect cables with a cross section up to 2.5 mm^2. Heat-resistant cables have to be used. Before connecting cables make sure the power supply complies with the instrument's requirements. Separate the probe cables from the power supply cables, from the outputs and the power connections. Do not exceed the maximum current allowed on each relay, in case of heavier loads use a suitable external relay.

4.1 GENERAL WARNINGS

Before connecting cables make sure the power supply complies with the instrument's requirements.

Separate the probe cables from the power supply cables, from the outputs and the power connections.

4.2 WIRING CONNECTIONS

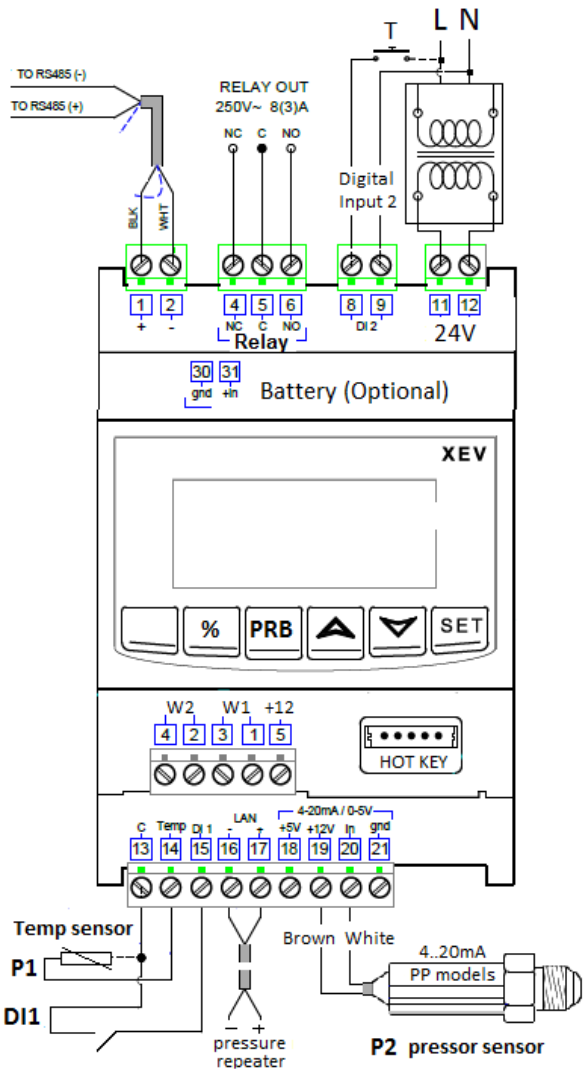

4.3 WIRING GUIDELINE

DEVICE TYPE	SUGGESTED CABLE
Analog temp sensor and Digital input	AWG 22-2 SHIELDED, **E.I.** BELDEN #8761
Rs-485 network	AWG 22-2 SHIELDED, **E.I.** BELDEN #8761
Pressure transducer	AWG 22-2 SHIELDED, **E.I.** BELDEN #8761
Stepper valve	Use valve manufacturer's harness with a maximum length, **not exceed 10 meters (30 feet).**
Power loads and valve	Allow a maximum wire size of 14 AWG (2 mm^2)

4.4 TEMPERATURE PROBE MOUNTING

Advised temperature probe placement is illustrated in figure nearby. Between 0 and 180 inclination degrees respect to horizontal pipe section.

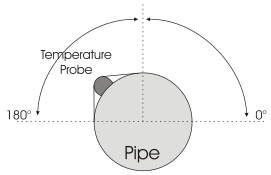

4.5 PROBE CONNECTION

4.5.1 General warnings

Pressure probe (4 - 20mA or ratiometric): respect the polarity. If using terminal ends be sure there are no bear parts which could cause short circuiting or introduce noise disturbance at high frequencies. To minimize the induced disturbances use shielded cables with the shield connected to earth.
Temperature probe: it is recommended to mount the temperature probe on the outlet of the evaporator heat/exchanger and to isolate it properly to detect the gas outlet temperature.

PP07 PP11, PP30, 4÷20mA pressure transducers:

Set parameter **tPP = 420.**

Connect:
Brown wire (+) to terminal 19;
White wire (-) to terminal 20

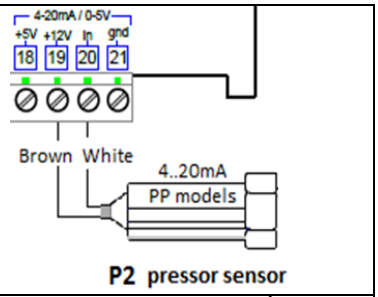

PPR15 PPR30 Ratiometric transducers (0.5÷4.5Vdc)
Set parameter **tPP = 5U**

Connect:
Brown wire (+) to terminal 18;
White wire (in) to terminal 20;
Green wire (gnd) to terminal 21

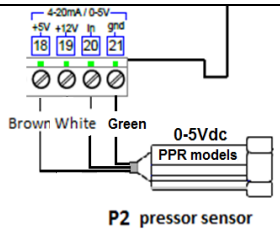

Temperature probe:
Set parameter
ttE = NTC: (NTC 10K) or
ttE = Pt1: (Pt1000) or
ttE = nCP: (NTC-US 10K)

Connect to terminals 13-14

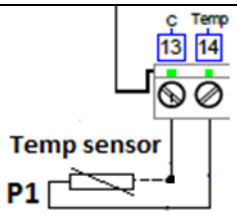

4.6 CONFIGURABLE DIGITAL INPUT CONNECTION

The superheat regulation is performed only when the **cooling digital input** is enabled.
It's possible to enable the SH regulation via:

- **Digital input 1, free voltage contact:**
  Use the **terminals (13-15),** set the parameter **i1F = CCL,** its polarity it's set by par. **i1P**.

- **Digital input 2 (8-9), main voltage contact**
  Use the **terminals (8-9),** set the parameter **i2F = CCL**, its polarity it's set by par. **i1P**

Usually the digital input is connected to a thermostat or an activation contact

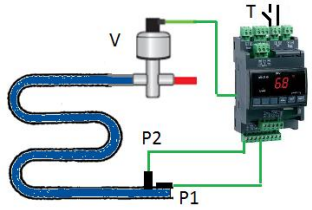

T= Thermostat (or activation contact)
V= Stepper valve (mono or bipolar)
P1= Temperature sensor (PT1000 o NTC or NTC-US)
P2= Pressure transducer 4..20mA or ratiometric (0-5Vdc).

4.7 SUPPLY CONNECTION

Power supply: XEV22D is powered at 24Vac/dc.
Use Class 2 transformer at list 20VA as the **TF20D**
Connect transformer to terminals 11-12.

4.8 VALVE CONFIGURATION

4.8.1 BEFORE CONNETTING THE VALVE

- **ALWAYS CONNECT OR DISCONNET THE VALVE WHEN THE CONTROLLER IS NOT POWERED**
- **CONFIGURE THE VALVE ON THE XEV22D BEFORE CONNECTING THE VALVE**

1. **BEFORE CONNECTING** the valve, to avoid possible problems, configure the driver by making the right changes on the parameters.
2. The max distance between an XM controller and a valve **must not exceed 10 m**. To avoid any problems, use only **shielded cables** with section greater than or equal to 0.325 mm² (AWG22).
3. Select the kind of motor (**tEU parameter**) and check if the valve is present in **tEP parameter table** reported here below.

	tEP	LSt (steps*10)	uSt (steps*10)	CPP (mA*10)	CHd (mA*10)	Sr (step/s)	tEu (bip/unip)	HSF (Half/full)
1	Danfoss ETS-25/50	7	262	10	10	300	bP	FUL
2	Danfoss ETS-100	10	353	10	10	300	bP	FUL
3	Danfoss ETS-250/400	11	381	10	10	300	bP	FUL
4	Sporlan SEI 0.5-11	0	159	12	0	200	bP	FUL
5	Sporlan SER 1.5-20	0	159	12	0	200	bP	FUL
6	Sporlan SEI 30	0	319	16	0	200	bP	FUL
7	Sporlan SER(I) G,J,K	0	250	12	0	200	bP	FUL
8	Sporlan SEI 50	0	638	12	0	200	bP	FUL
9	Sporlan SEH(I) 100	0	638	12	0	200	bP	FUL
10	Sporlan SEH(I) 175	0	638	12	0	200	bP	FUL
11	Copeland EX4-EX5-EX6	5	75	50	10	500	bP	FUL
12	Copeland EX7	10	160	75	25	500	bP	FUL
13	Copeland EX8 500	10	260	80	50	500	bP	FUL
14	Copeland EX3	4	33	0	0	50	uP	HAF

Liability Limitation
All the pre-sets have been done according to the documentation available when the XEV22D has been released, see below reference:
Danfoss:
- DKRCC.PD.VD1.C6.02 / 520H8021 @ Danfoss A/S (AC-MCI / sw), 2014-07

Sporlan:
- 92008 / Bulletin 100-20
- RACE Catalogue 100-20-3 EDEV-2/UK - 02/2013

Copeland
- FC-TD/ EX4-8 July 2008

In any case for each valve the only reference is given by the manual released by the manufacture together with the valve.
Copeland can't be considered responsible for any change made by the manufacturer and reported on the manufacturer manual.

4.8.2 Manual setting of valve

To set the valve manually, act the according to the following procedure:
a. Set **tEP=0**
b. Then set following parameters: **LSt**, **USt**, **Sr**, **CPP**, **CHd** according to the valve manual

4.9 VALVE CONNECTION

4.9.1 TERMINALS FOR VALVE CONNECTION

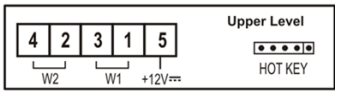

4 WIRES VALVES (BIPOLAR)

Connection numbering	ALCO EX	SPORLAN SEI-SEH	DANFOSS ETS
4	BLUE	WHITE	BLACK
2	BROWN	BLACK	WHITE
3	BLACK	RED	RED
1	WHITE	GREEN	GREEN

5-6 WIRES VALVES (UNIPOLAR)

Connection numbering	COPELAND EX3	SPORLAN	SAGINOMIYA
4	WHITE	ORANGE	ORANGE
2	BROWN	RED	RED
3	BLACK	YELLOW	YELLOW
1	BLUE	BLACK	BLACK
5 – Common	GRAY	GRAY	GRAY

AFTER MAKING THE CONNECTION, PLEASE SWITCH OFF AND ON THE XEV CONTROLLER IN ORDER TO BE SURE OF THE RIGHT POSITIONING OF THE VALVE.

4.10 EX3 SOLENOID VALVE CONNECTION

4.10.1.1 SOLENOID VALVE CONNECTION

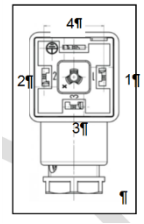

The positive shut-off function eliminates the necessity of having a separate solenoid valve or any external energy storage device such as battery or super-cap boards.

Pin connections.
Pin 1. Line - Power supply
Pin 2. Neutral
Pin 3. Not Used
Pin 4. Ground

4.10.2 230Vac or 115 Vac coil: Direct connection to the main power supply

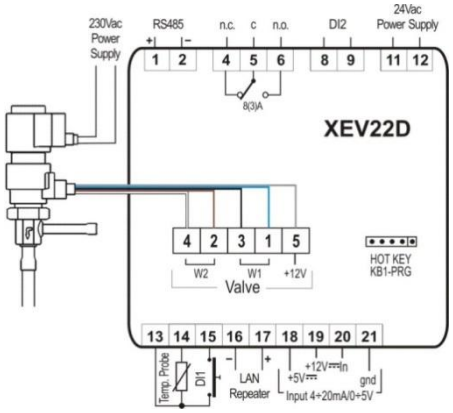

NOTE: EX3 models with 115Vac coil requires 115Vac supply.

4.10.3 24Vac coil: transformer connection.

With coil of the EX3 at 24Vac, a 40VA transformer must be used, like **TF40D**.
Any transformer with lower capacity can damage the valve or the controller

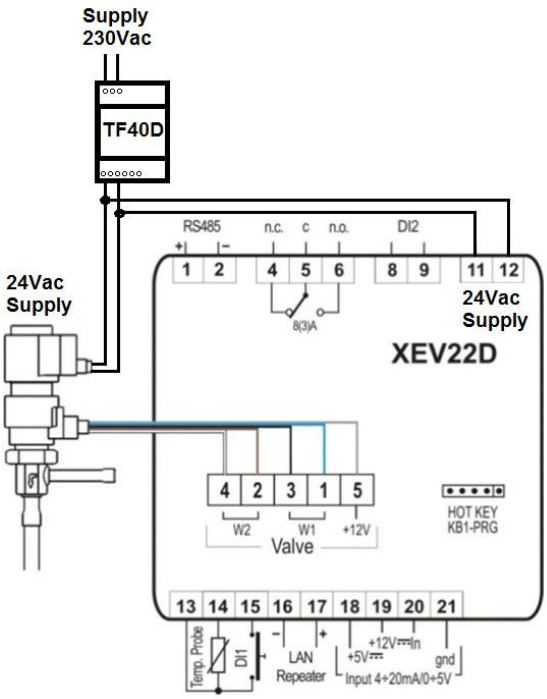

4.11 ABSOLUTE MAXIMUM POWER

XEV22D is able to drive a wide range of stepper valves, in the following table are indicated the maximum values of current that the actuator can supply to the stepper wiring. The **Copeland** transformer to use is the **TF20D**.
use is the **TF20D**.
NOTE: for the EX3 with 24Vac coil, if a unique transformer is used, the minimum required capacity is 40VA. The TF40D can be used.

NOTE: the electrical power absorption of the valve can be unrelated to refrigeration power that valve has. Before using the actuator, please read the technical manual of the valve supplied by the manufacturer and check the maximum current used to drive the valve in order to verify that they are lower than those indicated below.

VALVE TYPE	**BIPOLAR VALVES (4 wires)**	**Maximum Current 0.9A**
	UNIPOLAR VALVES (5-6 wires)	**Maximum Current 0.33A**

4.12 RS485 SERIAL LINE

All models can be connected to the monitoring and supervising system XWEB3000. If **Mod=Std** standard ModBUS-RTU protocol is used, if **Mod=AdU custom XWEB library is required**. This last configuration makes possible to use the same serial address of the thermostat that gives the cooling request to XEV. In this way, it's possible to reduce the number of addresses used.

4.13 CONNECTION OF XEC SUPERCAP (BACK UP BATTERY)

XEC Supercap is designed to be used with **Copeland** products (XM678D, XEV, IEV and others); to close the stepper valve in case of power failure.

!!!!! IMPORTANT !!!!!
XEC Supercap and XEV22D **must be powered by two different transformers**; the failure of the observance of this rule may result in damage to the XEC Supercap and / or the connected XEV22D.

Wiring connection

XEV22D	XEC
Terminal 31 (+)	Terminal 4 (12Vdc)
Terminal 30 (gnd)	Terminal 3 (gnd)

5. FRONT PANEL

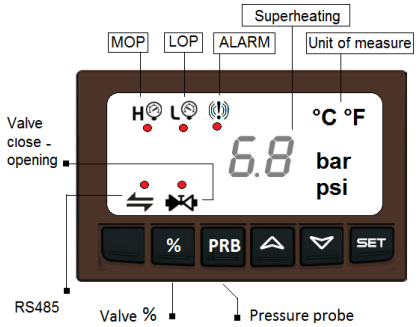

SET	To display and to modify the set point. In programming mode it selects a parameter or it confirms a value.
%	Push to display the valve opening value 0..100% for few seconds.
PRB	Push to display the pressure value for few seconds.
∧	By pressing and releasing this key, it's possible to see the values of the probes. In programming mode it slides the codes of the parameters or it increases their values.
∨	In programming mode it slides the codes of parameters or it decreases their values.

KEYS COMBINATIONS

∨ + ∧	To lock or to unlock the keyboard
SET + ∨	To enter programming mode.

5.1 XEV22D LEDS

On display there are some luminous dots. Their meaning is described in the following table:

LED	MODE	Function
L	ON	Low pressure alarm
H	ON	Maximum Operating Pressure alarm
	OFF	Valve is completely closed
	BLINKING	Valve is moving
	ON	Valve is completely opened
	BLINKING	Serial communication present
	OFF	Serial communication absent
	ON	Superheat alarm

6. USER INTERFACE

6.1 FAST ACCESS MENU (DURING REGULATION)

2) Press and release **UP** button.
3) The variable available in the Fast access menu are:
   a. **CLP** Cooling demand percentage
   b. **tP1** Temperature from Probe 1
   c. **PPr** Pressure value from Probe 2 transducer.
   d. **tP2** Suction temperature obtained from pressure temperature table .
   e. **SH** Value of superheat.;
   f. **StH** Superheat set point
   g. **oPP** Percentage of valve opening.
   h. **d1S** Free voltage digital input status
   i. **d2S** Main Voltage digital input status VAC
4) Brows parameter labels with **UP** or **DOWN** buttons.
5) Press **SET** to see read-only value. To change parameter, press **SET**.
6) To leave the fast access menu, press and release **SET+UP** or wait for time-out to expire (about 3 minutes).

NOTE: IF THE REGULATION IS NOT ENABLED THE CONTROLLER DISPLAYS "PMP".

6.2 HOW TO: SEE THE SET POINT

1) Press the **SET** buttons until the set point will be showed.
2) To come back to see temperature, wait about 5s or press newly **SET** key.

6.3 HOW TO: MODIFY THE SET POINT

To change the set point value operate as follows:
1) Press the **SET** button until the set point will be showed.
2) Use **UP** or **DOWN** buttons to change its value.
3) Press **SET** button to store the new value.

6.4 HOW TO: ENTERING "PR1" PARAMETER MENU



To enter in "Pr1" level menu:
1) Pressing **SET+ DOWN** buttons for about 3 seconds.
2) Instruments shows first parameter in Pr1 menu

6.5 HOW TO: ENTERING "PR2" PARAMETER MENU

To enter to "Pr2" parameters list:
1. Enter to "Pr1".
2. Select "Pr2" parameter and press **SET**.
3. The "**PAS**" label will be shown, then "**0--**" with 0 blinking.
4. Insert "**321**" password through **UP** and **DOWN** buttons**,** then press **SET** to confirm.

6.6 HOW TO: CHANGE A PARAMETERS VALUE



To change the parameter's value operate as follows:
1. Enter the Programming mode by pressing the **SET** and **DOWN** button for about 3s.
2. Select the required parameter.
3. Press the **SET** button to display the value.
4. Use **UP** or **DOWN** to change the value.
5. Press **SET** to store the new value and move to the following parameter.

To exit: Press **SET + UP** or wait 30s without pressing any button.
NOTE: the set value is stored even when the procedure is exited by waiting the time-out to expire.

7. PARAMETER LIST

NOTE: All pressure parameters are relatives or absolutes depending on the PrM parameter.

REGULATION

FtY — **Kind of gas:** type of gas used by plant. This is a fundamental parameter for correct functioning of all system.
The table below contains the refrigerant gases managed by the XEV22D and their operating temperature. The dew point pressure has been implemented

LABEL	REFRIGERANT	OPERATING RANGE
R22	r22	-50-60°C/-58÷120°F
134	r134A	-70-60°C/-94÷120°F
404	r404A	-50-60°C/-58÷120°F
47A	r407A	-50-60°C/-58÷120°F
410	r410	-50-60°C/-58÷120°F
507	r507	-70-60°C/-94÷120°F
47C	r407C	-50-60°C/-58÷120°F
47F	r407F	-50-60°C/-58÷120°F
290	r290 – Propane	-50-60°C/-58÷120°F
CO2	r744 - Co2	-50-60°C/-58÷120°F
450	r450A	-45-60°C/-69÷120°F
513	r513	-45-60°C/-69÷120°F
448	r448A	-45-60°C/-69÷120°F
449	r449A	-45-60°C/-69÷120°F

rEt — **Reaction time (**1÷100s; 0 = automatic time adjustment) time delay between valve position adjustments.
It's the time between the valve adjustment command and when the valve is moved.
EI
With **rEt = 1** the valve is moved continuously,
with **rEt = 10** the valve is moved every 10s,
with **rEt = 0** the reaction time is calculated automatically by the system, according the SH variation. The range is between 6÷60s,

PEo — **Probe Error opening percentage:** (0 to 100%) if a temporary probe error occurs, valve opening percentage is **PEo** until **PEd** time is elapsed.
If **PEO** is different from 0 it assures cooling also with probe error, because even if the device cannot calculate superheat the valve can work at **PEo** percentage.

PEd — **Probe Error delay before stopping regulation:** (0 to 239sec; 240=On=unlimited) if probe error duration is higher than **PEd,** valve will close completely and "**Pf**" message will be showed. With **PEd=on**, valve opening is **PEo** until probe error finishes.

tEU — **Type of Stepper motor:** (UP; bP) it permits to select the kind of valve.
UP = Unipolar valves;
bP = Bipolar valves.
!!!!! WARNING !!!!!
This parameter has to be adjusted before connecting the valve.

tEP — **Predefined valve selection:** (0 to 14)

	MODEL	LSt (steps*10)	uSt (steps*10)	CPP (mA*10)	CHd (mA*10)	Sr (step/s)	tEu (bip/unip)	HSF (Half/full)
1	**Danfoss ETS-25/50**	7	262	10	10	300	bP	FUL
2	**Danfoss ETS-100**	10	353	10	10	300	bP	FUL
3	**Danfoss ETS-250/400**	11	381	10	10	300	bP	FUL
4	**Sporlan SEI 0.5-11**	0	159	12	0	200	bP	FUL
5	**Sporlan SER 1.5-20**	0	159	12	0	200	bP	FUL
6	**Sporlan SEI 30**	0	319	16	0	200	bP	FUL
7	**Sporlan SER(I) G,J,K**	0	250	12	0	200	bP	FUL
8	**Sporlan SEI 50**	0	638	12	0	200	bP	FUL
9	**Sporlan SEH(I) 100**	0	638	12	0	200	bP	FUL
10	**Sporlan SEH(I) 175**	0	638	12	0	200	bP	FUL
11	**Copeland EX4-EX5-EX6**	5	75	50	10	500	bP	FUL
12	**Copeland EX7**	10	160	75	25	500	bP	FUL
13	**Copeland EX8 500**	10	260	80	50	500	bP	FUL
14	**Copeland EX3**	4	33	0	0	50	uP	HAF

Liability Limitation
All the pre-sets have been done according to the documentation available when the XEV22D has been released, see below reference:
Danfoss:
- DKRCC.PD.VD1.C6.02 / 520H8021 @ Danfoss A/S (AC-MCI / sw), 2014-07

Sporlan:
- 92008 / Bulletin 100-20
- RACE Catalogue 100-20-3 EDEV-2/UK - 02/2013

Copeland
- FC-TD/ EX4-8 July 2008

In any case for each valve the only reference is given by the manual released by the manufacture together with the valve.
Copeland can't be considered responsible for any change made by the manufacturer and reported on the manufacturer manual.

Manual valve setting
To set the valve manually, act the according to the following procedure:
a. Set **tEP=0**
b. Then set following parameters: **LSt**, **USt**, **Sr**, **CPP**, **CHd, tEu, HFS** according to the valve manual

HFS — **Kind of motor movement:** (HAF; FUL)
- **HAF** = half step. Use this setting for the unipolar valve.
- **FUL** = full step. Use this setting for the bipolar valve.

LSt — **Minimum number of steps:** (0 to USt (*10)) it permits to select the minimum number of steps. At this number of steps the valve should be closed. So it's necessary the reading of manufacturer datasheet to set correctly this parameter. It's the minimum number of steps to stay in advised range of functioning.
!!!!! WARNING !!!!! after changing this parameter the valve will have to be reinitialized. The device performs this procedure automatically and restarts its normal functioning when the programming mode ends.

USt — **Maximum number of steps:** (LSt to 800 (*10)) it permits to select the maximum number of steps. At this number of steps the valve should be completely opened. Read the datasheet provided by manufacturer of the valve to set correctly this parameter. It's the maximum number of steps to stay in advised range of functioning. **!!!!! WARNING !!!!! after changing this parameter the valve will have to be reinitialized. The device performs this procedure automatically and restarts its normal functioning when the programming mode ends.**

ESt — **Extra step in closing phase:** (0 to 255 (*10)) it sets the number of extra steps the controller performs, when the valve is closed at start up, to force the closure of the valve.

Sr — **Step rate:** (10 to 600 step/sec) it is the maximum speed to change step without losing precision (=losing steps). It's advised to stay under the maximum speed.

CPP — **Current per phase (only bipolar valves):** (0 to 100 (*10mA)) it is the maximum current per phase used to drive valve. It's used **only with bipolar valves.**

CHd — **Holding current per phase (only bipolar valves):** (0 to 100 (*10mA)) it is the current per phase when the valve is stopped for more than 4 minutes. It's used **only with bipolar valves.**

oPE — **Start opening Percentage:** (0 to 100%) opening valve percentage when start function is active and during post defrost phase. This phase duration is **SFd time**.

SFd — **Start Function duration:** (0.0 to 42min 00s, res. 10s) it sets start function duration and post-defrost duration. **During this phase the alarms are not enabled.**

dty	**Pilot duty:** (2-10dec/sec) To reach the final position the valve moves for Ton sec and stops for Tof sec, where Ton and Tof are defined as in the following:. Ton= dty/10s Toff= (1-dty/10)s **Note**: with dty=10 the Pilot duty function is disabled. With bipolar valve, during the Toff time the maintenance current is used. It can be used to drive properly some type of valves, where the manufacturer suggests to move the valve with duty cycle. The duty cycle in any case slows the valve adjustment and has an effect on the regulation, making it smoother.
MnF	**Maximum opening percentage at normal Functioning:** (0 to 100%) during regulation it sets the maximum valve opening percentage.
FoP	**Forced Opening percentage:** (0 to 100; nU) if **FoP=nU** valve works with regulation algorithm. If **FoP is different from nU** the valve stays at **FoP** opening percentage. This function could be useful during plant starting or during service operations.

PI PARAMETERS (trained staff)

AMS	**Self self adaptive SH regulation enabling:** parameter enables the self adaptive regulation of the superheat **no** = standard regulation using the PID parameters (Pb, rS, inC, dFC) **yES** = self-adaptive regulation, controller regulates SH automatically, setting the PID parameter
Atu	**Minimum STABLE superheat search (**No; yES) This parameter enables the search of the minimum stable superheat. The lowest admitted value is LSH+2°C
Pb	**Proportional band:** (0.1 to 50.0°C; 1 to 90°F) **PI** proportional band. A value bigger than 5°C is advised. 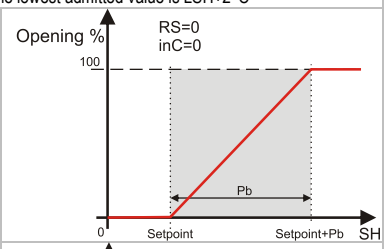
rS	**Band Offset:** (-12.0 to 12.0°C; -21 to 21°F) **PI** band offset. It permits to move the proportional band of the PI. With **rS=0** the band is between **[SEt to SEt+Pb]**. 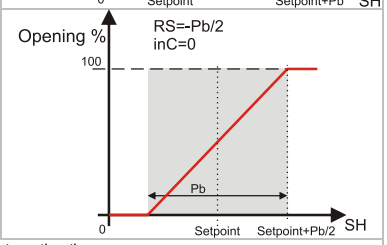
inC	**Integration time:** (0 to 255s) PI integration time.
dFc	**Derivative time** (0 to 255s) PID derivative time.

PROBE PARAMETERS

tPP	**Type of Pressure transducer:** (420; 5V; LAn) it sets type of pressure transducer to use. **420** = 4 to 20mA pressure transducer; **5V** = 0 to 5V ratiometric transducer; **LAn** = the pressure signal comes from another XEV module.
LPP	**Enable pressure probe sending in LAN:** (n; Y) if **LPP=Y** the value of pressure read by device is sent in LAN. Only one device of the LAN can have **LPP=Y**.
PA4	**Probe value at 4mA or at 0V:** (-1.0 to P20 bar; -14 to P20 psi) pressure value measured by probe at 4mA or at 0V (related to **PrM** parameter).
P20	**Probe value at 20mA or at 5V:** (PA4 to 60.0 bar; PA4 to 870 psi) pressure value measured by probe at 20mA or at 5V (related to **PrM** parameter).
oPr	**Pressure probe calibration:** -12.0 to 12.0 bar; -174 to 174 psi.
ttE	**Type of temperature probe for SH calculation (13-14)** (PtM; ntC) it allows to set the kind of probe used by the instrument: **PtM** = PT1000 probe, **ntC** = NTC 10K probe. **CtC** = NTC-US.
otE	**Temperature probe calibration:** -12.0 to 12.0°C; -21 to 21°F.

DIGITAL INPUTS

i1P	**Digital Input 1 (Free of voltage) digital input polarity:** (cL, oP) **CL** = activated when closed; **oP** = activated when opened.
i1F	**Digital Input 1 (Free of voltage) digital input function:** (CCL, rL) **CCL** = cooling call; **rL** = digital input activates relay.
d1d	**Digital Input 1 (Free of voltage) activation delay:** (0 to 255 min) this activation delay is used only if digital input is configured as **rL**.
i2P	**Digital Input 2 (High voltage) digital input polarity:** (CL, oP) **CL** = activated when closed; **oP** = activated when opened.
i2F	**Digital Input 2 (High voltage) digital input function:** (CCL, rL) **CCL** = cooling call; **rL** = digital input activates relay.
d2d	**Digital Input 2 (High voltage) activation delay:** (0 to 255 min) this activation delay is used only if digital input is configured as **rL**.

ALARM

dAo	**Alarm delay after restarting regulation:** (0.0 to 42min 00s, res. 10s) time between digital input activation (configured as **CCL**) and alarm signalling. The **LSH** alarm is always signalled also during this time.
tdA	**Type of alarm signalled by relay:** (ALL, SH, PrE, di) **ALL** = all alarm; **SH** = superheat alarm; **PrE** = pressure alarm; **di** = activation only when digital input configured as **rL** is active.
LPL	**Lower Pressure Limit for superheat regulation:** (PA4 to P20 bar; PA4 to P20 psi) when suction pressure comes down to **LPL**, the regulation is performed with a **LPL** fixed value for pressure. When suction pressure comes back to **LPL**, the normal pressure value is used (related to **PrM** parameter).
MoP	**Maximum Operating Pressure threshold:** (LoP to P20bar; LoP to P20 psi) if suction pressure exceeds maximum operating pressure value, the instrument signals this situation with an alarm LED **H** (related to **PrM** parameter).
LoP	**Lowest Operating Pressure:** (PA4 to MoP bar; PA4 to MoP psi) if the suction pressure comes down to this value, a low pressure alarm will be signalled with an alarm LED **L** (related to **PrM** parameter).
PHY	**Pressure alarm Hysteresis:** (0.1 to 5.0 bar, 1 to 72 psi) pressure hysteresis to disable alarm signalling.
dML	**Delta MoP-LoP:** (0 to 100%) when a **MoP** alarm occurs valve will close of the **dML** percentage every one second until **MoP** alarm is active. When **LoP** occurs, valve will open of the **dML** percentage every one second until **LoP** alarm is active.
MSH	**Maximum SuperHeat alarm:** (LSH to 80.0°C; LSH to 144°F) when superheat exceeds this value, an high superheat alarm will be signalled after interval **SHd**. When the Maximum superheat alarm recovers, **the valve waits SHd before restarting the regulation**
LSH	**Lowest SuperHeat alarm:** (0.0 to MSH°C; 0 to MSH°F) when superheat goes down to this value a low superheat alarm is signalled after interval **SHd**. When the Low superheat alarm recovers, **the valve waits SHd before restarting the regulation**
SHY	**SuperHeat alarm Hysteresis:** (0.0 to 25.5°C; 1 to 77°F) hysteresis for superheat alarm deactivation.
SHd	**SuperHeat alarm signalling delay/ Restart regulation delay after MAX or Low superheat alarm :** (0 to 255 s) when a superheat alarm occurs, the delay time **SHd** have to expire before signalling this alarm. After the superheat alarm the regulation restart after **SHd** time
FrC	**Fast-recovery Constant: (1 to 100 s; 0 = disabled) –** ***Present only in specific part numbers.*** **It permits to increase integral action when SH goes below the set-point, to close valve faster. With FrC=0 fast recovery function is disabled.**
tdS	**Pressure filter (**0-240s). The pressure value used for the SH calculation is the average value of the pressure in the tdS time. Suggested values: tdS: 5-10 for heat exchanger or condensing unit tdS: 1-6 for supermarkets. **E.I.** With tdS = 5 the controller calculates the average pressure value in 5s and will use it to calculate the SH.
tdt	**Temperature filter (**0-240s). The value used for the SH calculation is the average value of the temperature in the tdt time. A value between 1-3 his suggested **E.I.** With tdt = 3 the controller calculates the average temperature value in 3s and will use it to calculate the SH.

DISPLAY

Lod	**Local display:** (SH; PEr; P1; P2) **SH** = superheat; **PEr** = valve opening percentage; **P1** = value of temperature measured; **P2** = pressure measured by P2 probe.
CF	**Temperature measurement units:** (°C; °F) **°C** = Celsius degree; **°F** = Fahrenheit degree. **NOTE:** by changing measurement unit, the regulation parameters have to be correctly changed.
PMU	**Pressure Measurement units:** (bAr, PSi) **bAr** = bar; **PSi** = psi. **NOTE:** by changing measurement unit, the regulation parameters have to be correctly changed.
rES	**Resolution (only °C):** (dE; in) **dE** = decimal format; **in** = integer format.
PrM	**Pressure visualization Mode:** (rEL; AbS) **rEL** = relative pressure; **AbS** = absolute pressure. **All pressure parameters depend on this parameter.**
CLP	**Cooling Percentage (read only):** Display the cooling percentage.
tP1	**Temperature Probe value (read only):** it shows temperature probe value from P1.
PPr	**Pressure probe value (read only**): it shows pressure probe value. The value depends on **PrM**.
tP2	**Temperature from P2 (read only**): it shows temperature obtained from conversion of pressure value.
SH	**Super heat value**
STH	**Superheat set point value**
oPP	**Opening Percentage (read only):** it shows the actual opening percentage of the valve.
d1S	**Free of voltage digital input State (read only):** it shows the free of voltage digital input.
d2S	**High voltage digital input State (read only):** it shows the high voltage digital input state.
Adr	**RS485 Serial Address:** (1 to 247) Identifies the instrument address when connected to a ModBUS compatible monitoring system.
Mod	**ModBus:** (AdU; Std) **AdU** = (Only for XWEB systems) in this case XEV and thermostatic controller are considered an alone instrument (it requires a custom library for XWEB); **Std** = to use XEV in stand-alone mode, in this case normal Modbus-RTU protocol is used.
Ptb	**Parameters map: (read only)** it identifies parameters map written by factory.
rEL	**Release Firmware: (read only)** it shows firmware release.
Pr2	**Second level menu.**

8. FORCED OPENING

If necessary, by changing **FoP** parameter it's possible to force the valve opening. For example, by setting **FoP=50** the valve will be open at half of full scale. **To disable this function it's necessary to set FoP=nU** (default value). The valve opening is enabled only when CCL digital input is enabled.

9. HOW TO: USE THE HOT-KEY

9.1 PROGRAM A HOT-KEY FROM THE INSTRUMENT (UPLOAD)

1) Program one controller with the front keypad.
2) When the controller is ON, insert the **HOT-KEY** and push **UP** button; the "**uPL**" message appears followed a by flashing "**End**".
3) Push **SET** button and the "**End**" will stop flashing.
4) Turn OFF the instrument, remove the **HOT-KEY** and then turn it ON again.

NOTE: the "**Err**" message is displayed in case of any failed programming operation. In this case, push again **UP** button if you want to restart the upload again or remove the **HOT-KEY** to abort the operation.

9.2 PROGRAM AN INSTRUMENT USING A HOT KEY (DOWNLOAD)

1) Turn OFF the instrument.
2) Insert a pre-programmed **HOT-KEY** into the 5-PIN connector and then turn the Controller ON.
3) Automatically the parameter list present into the **HOT-KEY** will be downloaded into the Controller memory. The "**doL**" message will blink during this operation, followed a by a flashing "**End**" label.
4) After 10 seconds the instrument will restart working with the new parameters.
5) Remove the **HOT-KEY**.

NOTE: the "**Err**" message is displayed in case of any failed programming operation. In this case, push again **UP** button if you want to restart the upload again or remove the **HOT-KEY** to abort the operation.

10. DISPLAY MESSAGES

Mess.	Cause	Outputs
"PMP"	None of digital inputs configured as **CCL** are activated	Valve closed
"PF"	The Ped time is elapsed and the regulation is stopped	Valve closed after **PEd**. There is a probe error
"P1"	Temperature probe fault	According to **PEo** and **PEd**.
"P2"	Pressure transducer fault	According to **PEo** and **PEd**.
"HSH"	High superheat alarm	By PI
"LSH"	Low superheat alarm	Valve Closed
"LPL"	Low pressure limit	see **LPL** parameter
"MoP"	Maximum Operating Pressure	see **dML** parameter
"LoP"	Lowest Operating Pressure	see **dML** parameter
"StF"	Start Function enabled	see oPE, **SFd** parameter
"EE"	Memory error	-

10.1 ALARM RECOVERY

Probe alarms "**P1**", "**P2**" start few seconds after the fault in the probe; they automatically stop few seconds after the probe restarts normal operation. Check connections before replacing the probe. Max. And min. Alarms "**HSH**", "**LSH**", "**MoP**" and "**LoP**" automatically stop as soon as the variable returns to normal values.
The instrument is provided with an internal check verifying memory integrity. Alarm "**EE**" will flash when a failure in the internal memory is detected. In such case call the service.

11. TECHNICAL DATA

Housing: self extinguishing ABS.
Case: 4 DIN modules 70x135mm with male and female connectors; depth 60mm.
Mounting: DIN RAIL mounted in an omega (3) din rail.
Protection: IP20.
Connections: pluggable screw terminal block ≤ 2.5 mm^2 wiring.
Power supply: 24Vac/dc ±10%.
Power absorption: depending on connected valve 20VA max.
Display: three digits with icons, red LEDs, height 14.2 mm.
Inputs: 1 temperature probe:
PT1000 probe: -50 to 110°C (-58 to 230°F).
NTC probe: -40 to 110°C (-40 to 230°F).
1 pressure transducer: 4 to 20mA or 0 to 5V.
Digital inputs: 1 free of voltage.
1 high voltage.
Outputs for valve: bipolar or unipolar valves.
Data storage: on the non-volatile memory (EEPROM).
Kind of action: 1B.
Pollution degree: normal.
Software Class: A.
Operating temperature: 0 to 55°C (32 to 131°F).
Storage temperature: -25 to 60°C (-13 to 140°F).
Relative humidity: 20 to 85% (no condensing).
Resolution: 0.1°C or 1°F.
Precision a 25°C (77°F): ±0.7°C ±1digit.

12. STANDARD VALUES

Label	Description	Range	Default	Level
StH	Superheat set point	0.0÷24°C	6	---
FtY	Kind of gas	R22,134,404,47A,410, 507, 47C; r407c; 47F; 290; CO2; 450; 513; 448; 449	404	Pr2
rEt	Reaction time	0÷100s	1	Pr2
PEo	Probe Error opening percentage	0 to 100 %	1	Pr2
PEd	Probe Error delay before stopping regulation	0 to 239 s; on	50	Pr2
tEU	Type of Stepper motor	uP; bP	On	Pr2
tEP	Automatic Valve configuration	0 to 10	bP	Pr2
HFS	Kind of driving	HAF; FUL	0	Pr2
LSt	Minimum number of steps	0; USt (*10)	FUL	Pr2
USt	Maximum number of steps	LSt to 800 (*10)	0	Pr2
ESt	Extra steps in closing phase	0 to 255 (*10)	0	Pr2
Sr	Step rate	10 to 600 step/s	0	Pr2
CPP	Current per phase (only bipolar valves)	0 to 100 (*10mA)	10	Pr2
CHd	Holding current per phase (only bipolar valves)	0 to 100 (*10mA)	0	Pr2
oPE	Start opening Percentage	0 to 100 %	80	Pr2
SFd	Start Function duration	0.0 to 42min 00s, res. 10s	0,3	Pr2
dty	Pilot duty	2 ÷ 10 dec/sec	10	Pr2
MnF	Maximum opening percentage	0 to 100 %	100	Pr2
FoP	Forced Opening time-out	0 to 100 %; nU	nu	Pr2
PI PARAMETERS (trained staff)				
AMS	Self self adaptive SH regulation enabling	No; yES	n	Pr2
Atu	Minimum STABLE superheat search	no; yES	n	Pr2
Pb	Proportional band	[0.1 to 50.0°C] [1 to 90°F]	12	Pr2
rS	Band Offset	[-12.0 to 12.0°C] [-21 to 21°F]	0.0	Pr2
inC	Integration time	0 to 255 s	180	Pr2
dFC	Derivative time	0 to 255 s	2	Pr2
PROBE PARAMETERS				
tPP	Type of pressure transducer	420; 5V; LAn	420	Pr2
LPP	Enable pressure probe sending in LAN	n; Y	n	Pr2
PA4	Probe value at 4mA or at 0V (related to PrM parameter)	[-1.0 to P20 bar] [-14 to P20 psi]	-0.5	Pr2
P20	Probe value at 20mA or at 5V (related to PrM parameter)	[PA4 to 60.0 bar] [PA4 to 870 psi]	11	Pr2
oPr	Pressure probe calibration	[-12.0 to 12.0 bar] [-174 to 174 psi]	0.0	Pr2
ttE	type of temperature probe	ntC(0) - PtM(1) - nCP(2)	PtM	Pr2
otE	Temperature probe calibration	[-12.0 to 12.0°C] [-21 to 21°F]	0,0	Pr2
DIGITAL INPUTS				
i1P	Free of voltage digital input polarity	CL; oP	cL	Pr2
i1F	Free of voltage digital input function	CCL; rL	CCL	Pr2
d1d	Digital input 1 (free of voltage) activation delay	0 to 255 min	0	Pr2
i2P	Main voltage digital input polarity	CL; oP	cL	Pr2
i2F	Main voltage digital input function	CCL, rL	CCL	Pr2
d2d	Digital input 2 (Main voltage) activation delay	0 to 255 min	0	Pr2
ALARMS				
dAo	Alarm delay after restarting regulation	0.0 to 42min 00s, res. 10s	10.0	Pr2
tdA	Type of alarm signalled by relay	ALL; SH; PrE; Di	ALL	Pr2
bon	Buzzer enabling	No; yES	n	Pr2
tbA	Alarm relay silencing	No; yES	n	Pr2
LPL	Lower pressure limit for superheat regulation (related to PrM parameter)	[PA4 to P20 bar] [PA4 to P20 psi]	-0.5	Pr2
MoP	Maximum operating pressure threshold (related to PrM parameter)	[LoP to P20 bar] [LoP to P20 psi]	11.0	Pr2
LoP	Minimum suction pressure limit (related to PrM parameter)	[PA4 to MoP bar] [PA4 to MoP psi]	-0.5	Pr2
PHy	Pressure alarm Hysteresis	[0.1 to 5.0 bar] [1 to 72 psi]	0.2	Pr2
dML	delta **MoP-LoP**	0 to 100%	5	Pr2
MSH	Maximum superheat alarm	[LSH to 80.0°C] [LSH to 176°F]	80.0	Pr2
LSH	Lowest superheat alarm	[0.0 to MSH°C] [0 to MSH°F]	2.5	Pr2
SHY	Superheat hysteresis	[0.1 to 25.5°C] [1 to 77°F]	0,5	Pr2
SHd	Superheat alarm signalling delay/ Restart regulation delay after MAX or Low superheat alarm	0 to 255 s	30	Pr2
FrC*	Fast recovery Constant	0÷100; 0 = Disabled	0	Pr2
DISPLAY				
tdS	Pressure filter	0-240s	5	Pr2
tdt	Temperature filter	0-240s	3	Pr2
Lod	Local display	SH; PEr; P1; P2	SH	Pr2
CF	Temperature measurement units	°C; °F	°C	Pr2
PMu	Pressure measurement unit	bAr; PSi	bAr	Pr2
rES	Resolution (only °C)	dE; in	dE	Pr2
PrM	Type of pressure (Absolute / relative)	rEL; AbS	rEL	Pr2
CLP	Cooling call percentage	Read only	---	Pr1
tP1	Temperature probe value	Read only	---	Pr1
PPr	Pressure probe value	Read only	---	Pr1
tP2	Temperature converted from pressure probe	Read only	---	Pr1
SH	**Super heat value**	Read only	---	Pr1
STH	**Superheat set point valu**	Read only	---	Pr1
oPP	Actual Opening percentage	Read only	---	Pr1
d1S	Free of voltage digital input state	Read only	---	Pr1
d2S	Main voltage digital input state	Read only	---	Pr1
Adr	Serial address	1 to 247	1	Pr2
Mod	Modbus type	Std; AdU	Std	Pr2
Ptb	Parameters map	- - -	-	Pr2
rEL	Release software	- - -	1.5	Pr2
Pr2	Second level menu	- - -	-	Pr1

* Present only in specific part numbers

Part Name 部件名称	Hazardous Substances /有害物质									
	Lead (Pb) 铅	Mercury (Hg) 汞	Cadmium (Cd) 镉	Hexavalent Chromium (Cr +6) 六价铬	Polybrominated biphenyls (PBB) 多溴联苯	Polybrominated diphenyl ethers (PBDE) 多溴联苯醚	Dibutyl phthalate (DBP) 邻苯二甲酸二正丁酯	Diisobutyl phthalate (DIBP) 邻苯二甲酸二异丁酯	Butyl benzyl phthalate (BBP) 邻苯二甲酸丁基苄酯	Bis(2-ethylhexyl) phthalate (DEHP) 邻苯二甲酸二(2-乙基)己酯
Active components 主动元器件	x	O	O	O	O	O	O	O	O	O
Capacitors 电容	x	O	O	O	O	O	O	O	O	O
Connectors 连接器	x	O	O	O	O	O	O	O	O	O
Displays & keys 显示&按键	x	O	O	O	O	O	O	O	O	O
Power components 功率元件	O	O	x	O	O	O	O	O	O	O
Resistors 电阻	x	O	O	O	O	O	O	O	O	O



COPELAND

Copeland Controls S.r.l.
Z.I. Via dell'Industria, 27 - 32016 Alpago (BL) ITALY
Tel. +39 0437 9833 r.a. - copeland.com - dixell@copeland.com